SMART FISHING DRONE

User Manual for SharkX

V9:20220401

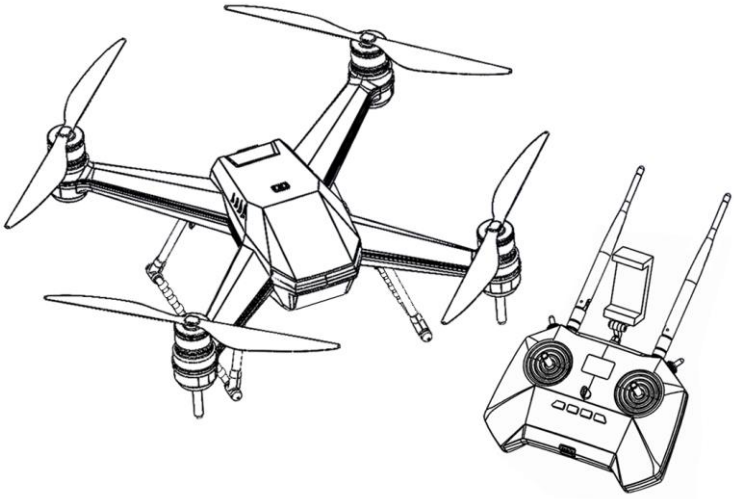

Download the Rippton App

Search for “Rippton” on the Google Play Store, Samsung Galaxy Apps or App Store to install the app on your mobile device or scan this QR code.

RIPPTON

Trademark

Rippton has made every effort to supply trademark information about company names, products and services mentioned in this manual. Trademarks shown below were derived from various sources. All trademarks are the property of their respective owners.

General notice: some product names used in this manual are used for identification purposes only and may be trademarks of their respective companies.

RIPPTON

SharkX

Table of Contents

1. Preface 6

1.1. User Experience Requirements 6

1.2. Conventions Used in This Manual 6

1.3. Explanation of Safety Warnings 7

1.4. Read, Understand and Retain Instructions 7

1.5. Obtaining Documentation and Information 8

2. Description of the Product 9

2.1. Intended Use and Reasonably Foreseeable Misuse 9

2.2. Process Overview 10

2.3. Technical Data 11

2.4. Product Compliance 12

2.5. Product Components 12

3. Preparation and Installation 14

3.1. Unpack the Package and Check the Contents 14

3.2. Conditions before Assembling the SharkX 14

3.3. Installation of the SharkX 15

3.4. Preparation of the Controller 16

4. Operations & Use 17

4.1. Check before Using the SharkX 17

4.2. Start the SharkX 17

4.3. Start the Controller 18
4.4. Connect the SharkX to Your Mobile Device 18
4.5. Calibrate the Compass 19
4.6. Preflight Check List: 24
4.7. Controller Interface 25
4.8. Take off the SharkX via the Controller 25
4.9. Control the SharkX 27
4.10. Return & Land the SharkX Manually via Controller 28
4.11. Return & Land the SharkX Automatically via Controller 29
4.12. Cancel RTL 29
4.13. Cast the Fishing Line via Controller 29
5. Maintenance 30
5.1. Take Care of the SharkX 30
5.2. Charge the SharkX Battery 31
5.3. Charge the Controller 32
5.4. Inspect the Product 33
5.5. After-sales Information 36
6. Troubleshooting and Repair 37
6.1. Identify and Solve Problems 37
6.2. Replacing the Propellers 37
7. Disposal 38
7.1. Disposal of Electronic Components 38
7.2. Disposal of Packaging Waste 38
7.3. Disposal of Batteries 38

8. FCC Compliance.....39
8.1. FCC Compliance.....39
8.2. FCC Warning Message.....39
8.3. FCC RF Radiation Exposure Statement Caution.....40
8.4. FCC RF Exposure Information (SAR).....40

1. Preface

***Notice** this manual is for the SharkX but also applicable to the SharkX Plus and the SharkX Pro. The SharkX is the basic model while the Plus and the Pro are upgraded versions so they include additional functions and features. Therefore, all the charts and graphics in this manual are just for a general reference and should be subject to actual applications and updates.

1.1. User Experience Requirements

This document is intended for the user of the SharkX Smart Fishing Drone, which should only be used by people with experience in flying drones. Users without any drone-piloting experience should practice more than 20 hours in a wide and empty space, before using the SharkX for sea fishing.

1.2. Conventions Used in This Manual

The following style conventions are used in this document:

- **Bold**

Names of product components, commands, options, programs, processes, services, and utilities.

Names of interface elements (such as windows, dialog boxes, buttons, fields, and menus) Interface elements the user selects, clicks, presses, or types.

- *Italic*

Publication titles referenced in the text Emphasis (for example a new term) Variables.

- Courier

System output, such as an error message or script URLs, complete paths, filenames, prompts, and syntax.

1.3. Explanation of Safety Warnings



Danger indicates a hazard with a high level of risk which, if not avoided, will result in serious injury.



Warning indicates a hazard with a medium level of risk which, if not avoided, could result in serious injury.



Caution indicates a hazard with a low level of risk which, if not avoided, could result in minor or moderate injury.



Notice indicates information considered important, but not hazard-related.

1.4. Read, Understand and Retain Instructions

Read and understand this manual and its safety instructions before using this product. Failure to do so can result in serious injury.

Follow all instructions. This will avoid fire, explosion, electric shock or other hazards that may result in damage to property and/or severe injuries.

The product should only be used by people who have fully read and understood the contents of this user manual.

Ensure that each person who uses the product has read these warnings and instructions and follows them.

Keep all safety information and instructions for future reference and pass them on to

subsequent users of the product.

The manufacturer is not liable for cases of material damage or personal injury caused by incorrect handling or non-compliance with the safety instructions. In such cases, the warranty will be voided.

1.5. Obtaining Documentation and Information

1.5.1. Internet

The latest version of the documentation, as well as video tutorials, is available at the following address: www.rippton.com/tutorial or Rippton's official YouTube channel.

1.5.2. Ordering documentation

Documentation, user instructions and technical information can be ordered by sending an email to support@rippton.com.

1.5.3. Documentation feedback

If you are reading Rippton product documentation on the internet, any comments can be submitted on the support website. Comments can also be sent to support@rippton.com. We appreciate your comments.

1.5.4. Support and service

For service-related questions, please contact:

Rippton/Ningbo Pelican Drone Co., Ltd.

support@rippton.com

2. Description of the Product

2.1. Intended Use and Reasonably Foreseeable Misuse

The SharkX is intended to be used as a drone for professional sea fishing purposes, such as:

- Flying and releasing the fishing line to the desired location.

The product should be used in open areas on the beach, above the sea, with no obstacles and should always stay within the sight of its user. The product is intended to carry a maximum payload of 3 kg.

The SharkX is NOT intended for:

- Indoor use.
- Use in or close to residential areas or areas frequented by people.
- Use in No-Fly Zones.
- Use as a toy. The SharkX must not be used by children under 14 years of age. The product is *not* a toy.
- Use in or near rough water and extreme weather conditions, such as strong winds (greater than 35 km/h), rain, snow or fog.
- Use close to large metal structures.
- Areas with high levels of electromagnetism, including base stations and radio transmission towers.

  Use above the maximum allowed flight altitude of 120 meters and maximum allowed flight radius of 1 km.

The SharkX Fishing Drone should be used with the following software, original accessories and components only:

- SharkX battery (including charger)
- SharkX remote controller (including charging cable)
- SharkX propellers
- Rippton App
- Other new accessories listed on Rippton official website

All other uses of the product not described in this manual are regarded as unintended use.

2.2. Process Overview

The SharkX is a drone for professional fishing purposes. It consists of a drone (with built-in fishing line release mechanism), a controller, mobile device clamp.

Flight data is automatically recorded on to the internal storage of the SharkX. This includes flight telemetry and SharkX status information.

The SharkX has a **fishing line release mechanism** which can easily perform accurate fishing line release. Your fishing line can be attached to the **fishing line release mechanism**. Once the fishing line is at the desired location, it can be dropped using the **controller** or via the Rippton App.

2.3. Technical Data

Parameter	**Unit**
SharkX	
Device Name	SharkX Smart Fishing Drone
Weight	3.2 kg
Dimensions	480 x 480 x 215 mm (Propeller Closed)
Propeller	16 inches
Max Speed	10 m/s (36 km/h)
Max Payload	3.0 kg
Max Wind Resistance	10 m/s (36 km/h)
Protection Level	Water Surface Floating
Operating Temperature	-10 ºC to 40 ºC
Operating Frequency	2400 ~ 2483.5 MHz
Transmitter Power (EIRP)	+20 dBm
Satellite Systems	GPS/GLONASS/GALILEO/BEIDOU
*Flying Time (Without Payload)	23 mins
*Suggested Casting Radius (With Payload)	1 km
Radio Technology	Wi-Fi Data Transmission Controller Spread Spectrum Wireless
Frequency Band	2.4 Ghz Wi-Fi Data Transmission 2.4 Ghz Controller Spread Spectrum Wireless
SharkX Remote Controller	

LCD Screen	0.96 inches
Operating Frequency	2400~2483.5 MHz
Max Transmission Distance (Unobstructed, Free of Interference)	1 km
SharkX Battery	
Capacity	6,000 mAh
Battery Type	LI – PO

2.4. Product Compliance

This product complies with all relevant Australia & New Zealand Directives.

2.5. Product Components

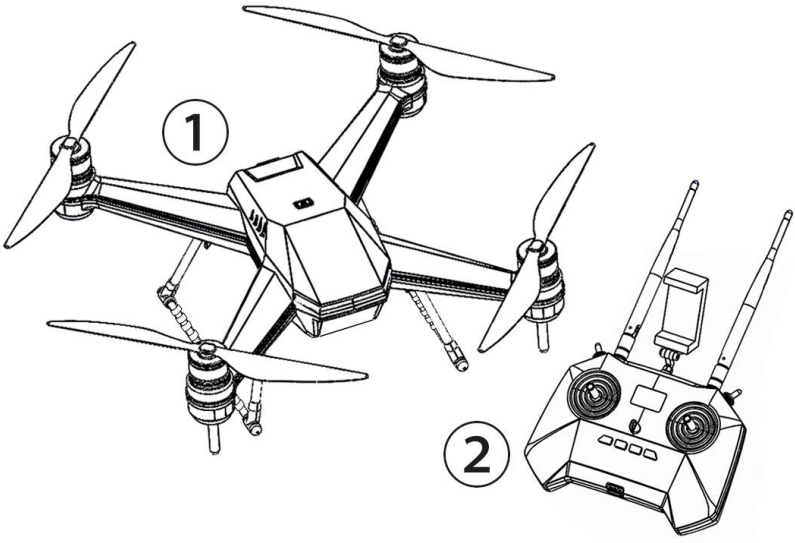

① SharkX Smart Fishing Drone

② SharkX Remote Controller

2.5.1. SharkX

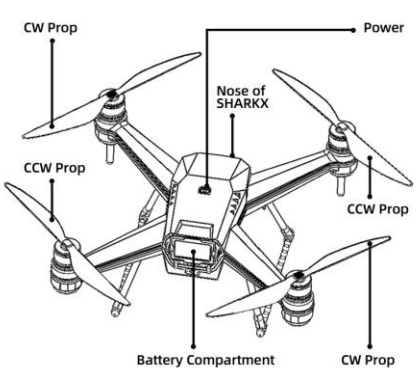

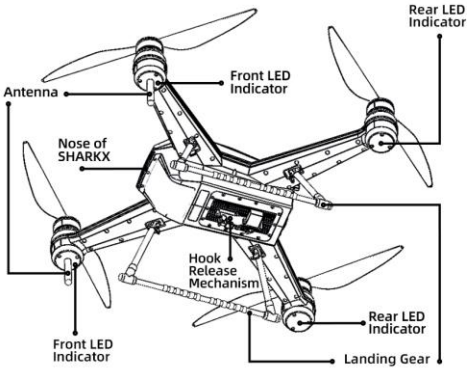

2.5.2. Controller

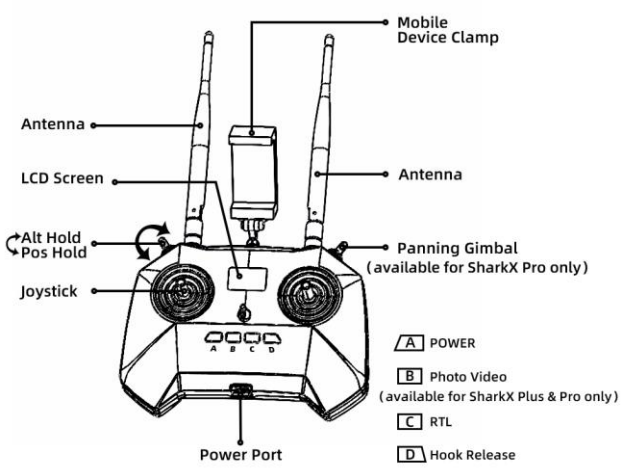

3. Preparation and Installation

NOTICE

- Handle, lift, carry and transport the product with great care to prevent it from being damaged.

3.1. Unpack the Package and Check the Contents

The package should fully contain the following items:

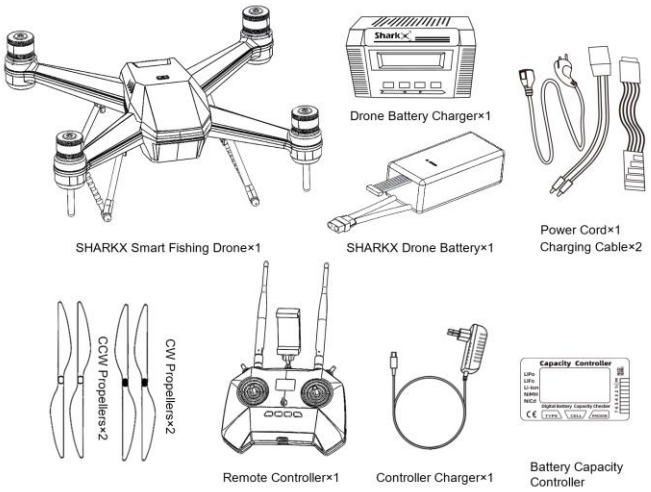

3.2. Conditions before Assembling the SharkX

3.2.1. Make sure you have downloaded and installed the **Rippton App** from the Google Play Store, Samsung Galaxy Apps or App Store. Register as a Rippton App user.

3.2.2. Make sure that the SharkX **battery** and **controller** are fully charged.

3.3. Installation of the SharkX

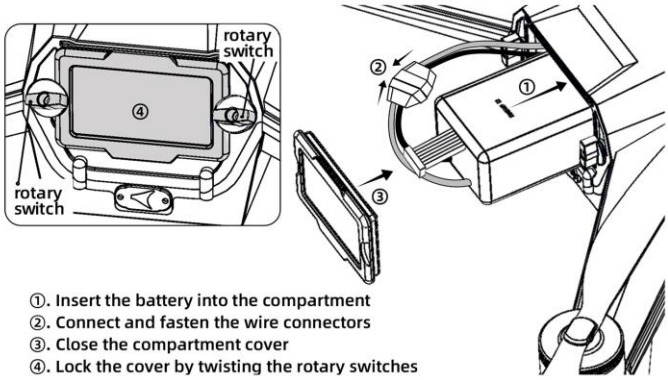

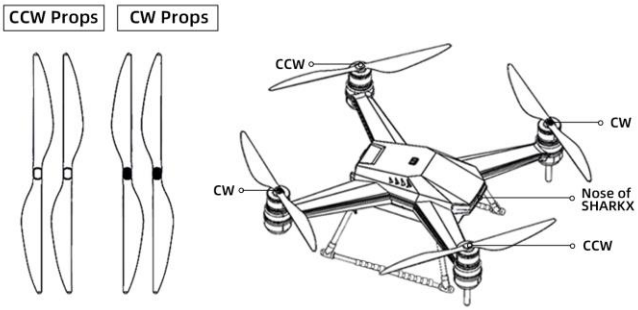

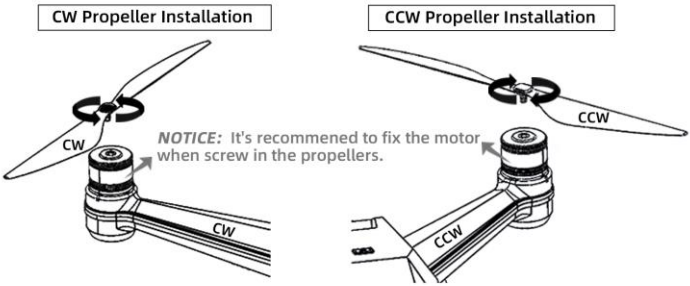

Notice please refer to **step** 6.2.1 to disassemble the propellers

3.4. Preparation of the Controller

1. Tilt the antennas up.

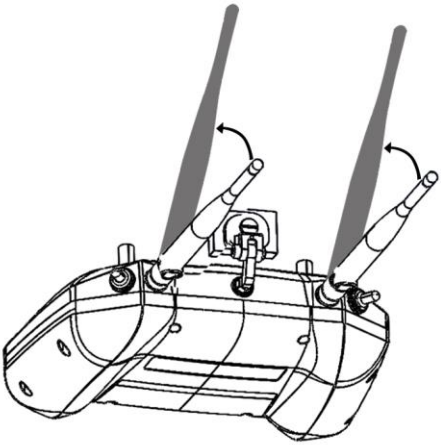

2.Fasten your mobile device securely to the clamp.

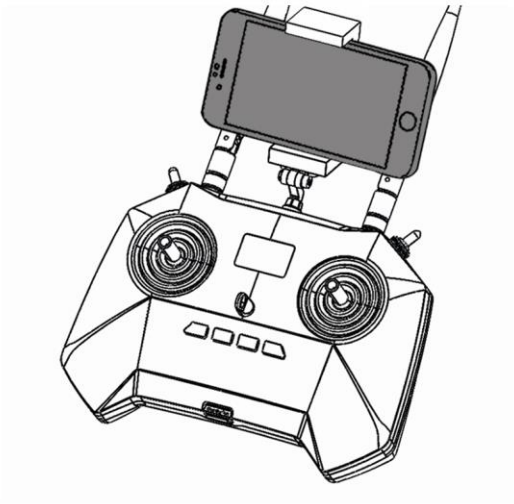

4. Operations & Use

4.1. Check before Using the SharkX

4.1.1. Minimum space needed

Ensure there are no people or any other obstacles within a range of 20 meters before you start flying in order to avoid possible injury or damage. Only use the product in open areas on the beach and above the sea.

4.1.2. Preload the map on the App

When using the SHARKX in any new areas, it's always necessary to enter the 'Rippton' app with network connection and finish preloading the map before connecting the SHARKX to your mobile device.

4.1.3. Before launching the SharkX, please make sure the satellite number is no less than 15, otherwise the drone will not take off successfully

4.2. Start the SharkX

Long press the '**POWER**' button till LED indicators are on and SharkX beeping.

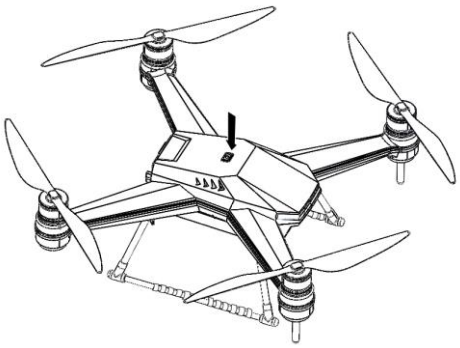

4.3. Start the Controller

Long press the '**POWER**' button, the controller will vibrate and beep, and then the screen lights on.

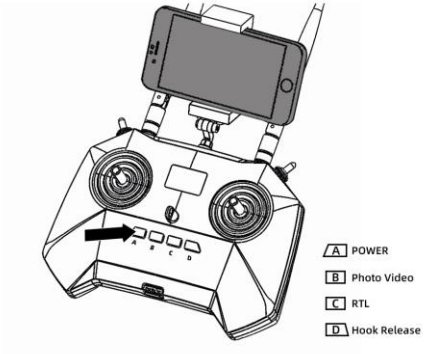

4.4. Connect the SharkX to Your Mobile Device

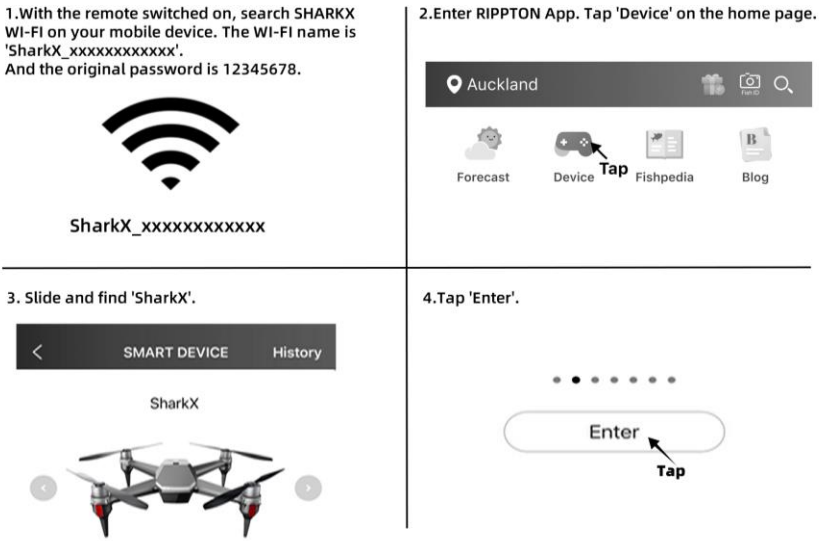

Notice there is a voice prompt indicating SharkX connected successfully

4.5. Calibrate the Compass

NOTICE

The compass needs to be calibrated in the following situations:

- When you use the SharkX for the first time.
- When you fly at a new place.
- When the SharkX has not been used for more than one month.

DO NOT calibrate the compass in the presence of a strong magnetic interference, such as magnetite, parking structures, and steel reinforcements underground.

DO NOT carry ferromagnetic materials with you during calibration, such as mobile phones.

To calibrate the SharkX compass

4.5.1. Choose an outdoor open area to carry out the calibration procedures.

4.5.2. Open the Rippton App. Tap '**Set'** on the top right corner and follow the steps below to enter '**COMMON SETTINGS'**.



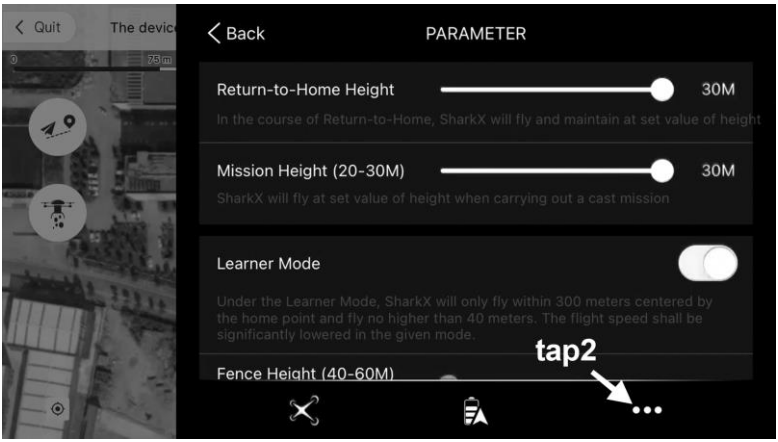
Quit
Back
PARAMETER
Return-to-Home Height
30M
In the course of Return-to-Home, SharkX will fly and maintain at set value of height
Mission Height (20-30M)
30M
SharkX will fly at set value of height when carrying out a cast mission
Learner Mode
Under the Learner Mode, SharkX will only fly within 300 meters centered by the home point and fly no higher than 40 meters. The flight speed shall be significantly lowered in the given mode.
Fence Height (40-60M)
tap2

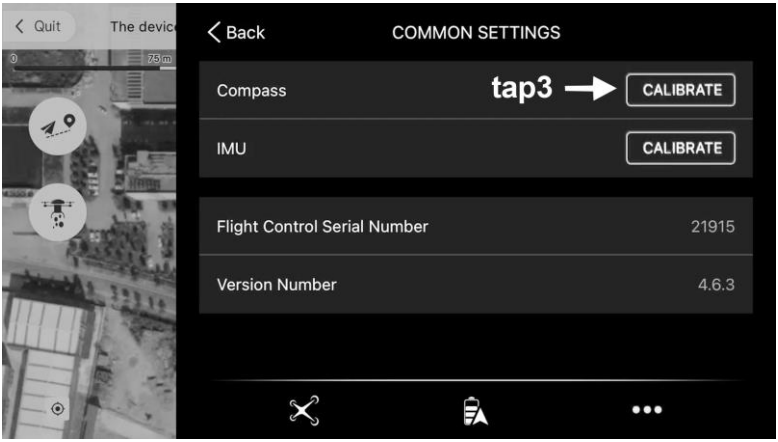
Quit
Back
COMMON SETTINGS
Compass
tap3
CALIBRATE
IMU
CALIBRATE
Flight Control Serial Number
21915
Version Number
4.6.3

4.5.3. Tap the Compass ‘CALIBRATE’ icon and enter the compass calibration interface.

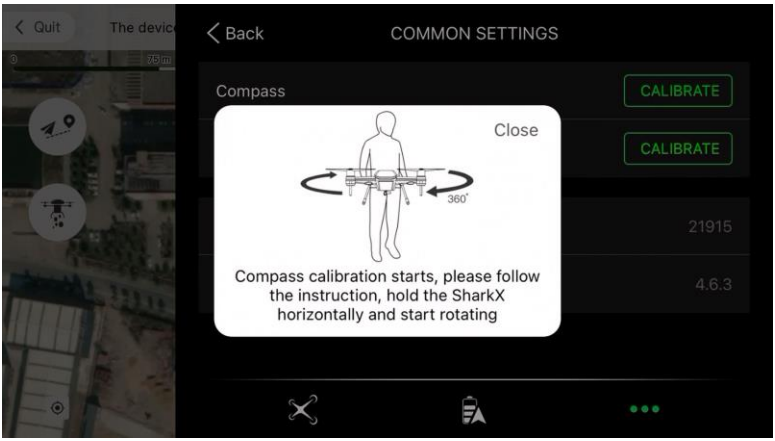

4.5.4. Following the audio instructions, hold the drone horizontally with its nose outwards and complete the horizontal calibration. And then hold the drone vertically with its nose downwards and complete the compass calibration.

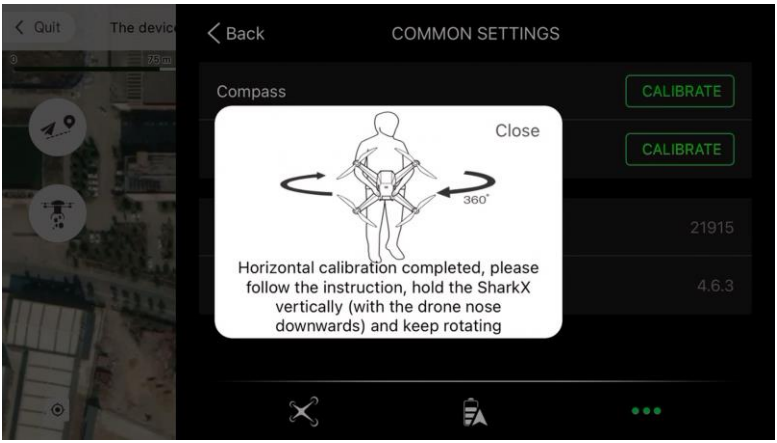

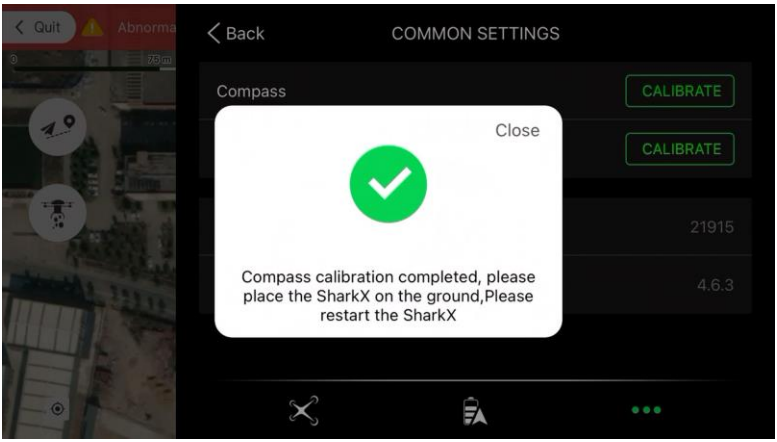

Notice calibrate the compass when there are no less than 15 satellites

SharkX Indicator Status of Horizontal Calibration:

Calibration Process	SharkX Turned On	GPS Signal Received	Horizontal Calibration Ready	Horizontal Calibration Completed
Color	Front- red Rear- blue	Front- red Rear- green	Front- red Rear- yellow	Front- red Rear- yellow
Flashing	Flashing	Flashing	Flashing	Flashing

SharkX Indicator Status of Vertical Calibration:

Calibration Process	Vertically Calibration Ready	Vertical Calibration Completed	Whole Process Completed
Color	Front- red Rear- yellow	Front- red Rear- blue	Front- red Rear- green
Flashing	Flashing	Flashing	Flashing

To calibrate the IMU

NOTICE: IMU calibration is only required after a crash or a repair.

4.5.5. Repeat ***step 4.5.2*** and enter '**COMMON SETTINGS**'. Tap the lower '**CALIBRATE**' icon. Enter the IMU calibration interface.

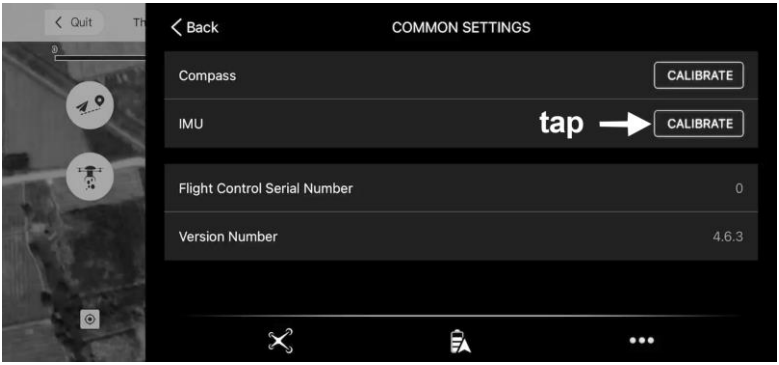

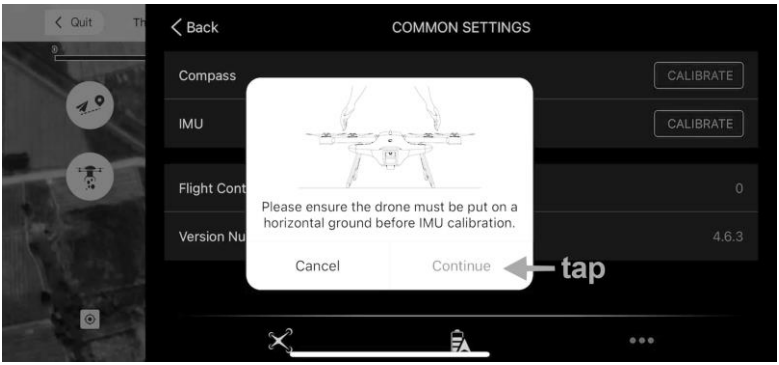

4.5.6. Place the SharkX on the horizontal ground. Tap '**Continue**'. IMU calibration will be completed automatically.

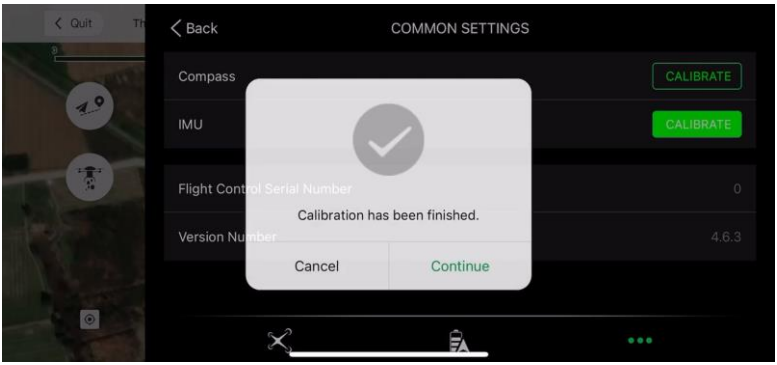

Notice if the SharkX appears forward or backward shift during flight, re-calibrate the compass. If problem still exists, contact local distributor/dealer and seek help.

Notice after completing calibrating the compass and IMU, turn off the drone and place it on the level ground where you desire to take off the SharkX. And then restart the drone, the controller and the Rippton App.

4.6. Preflight Check List:

- Make sure that the controller, SharkX battery, and mobile device are fully charged.
- Make sure that the propellers are mounted correctly and firmly.
- Make sure that the mobile device clamp is mounted correctly and firmly.
- Make sure that the hook release mechanism operates correctly.
- Notice if the hook release mechanism payload exceeds 3.0kgs, check if the hook release mechanism can still unlock. Lift the SharkX up to the chest and release the fishing line, if the device could not unlock, reduce the payload weight.
- Make sure that the Rippton App operates correctly.

4.7. Controller Interface

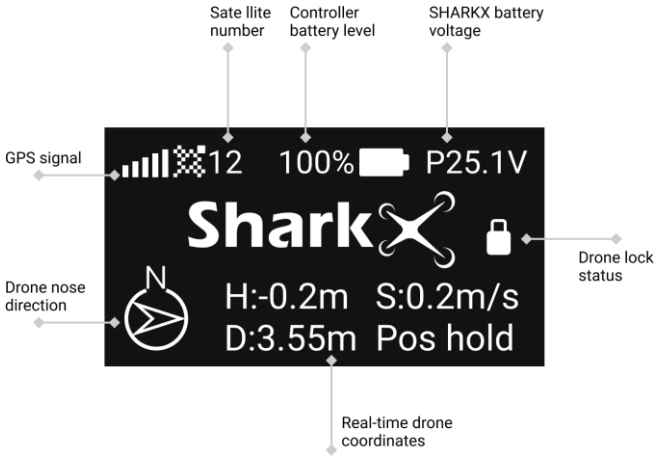

4.8. Take off the SharkX via the Controller

4.8.1. Switch the flight mode to **Pos Hold**

It's recommended to set the drone on **Pos Hold** mode at all times. **Alt Hold** mode is for professional drone pilot only.

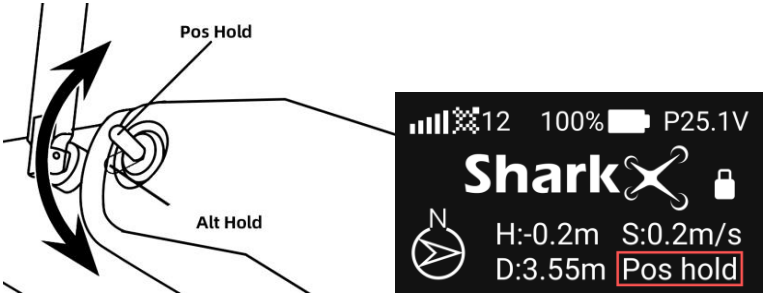

Notice when both joysticks are centered, if on **Pos Hold** mode, the drone will hover at the current position, and if on **Alt Hold** mode, the drone might get pushed away from the current position by wind.

4.8.2. Unlock the SharkX

Push the **left joystick** to the lower right corner and hold until the controller beeps, the lock icon disappears on the controller screen and then all propellers start rotating, which means the drone has been unlocked. Slowly push the **left joystick** back to the center and the SharkX is ready to take off.

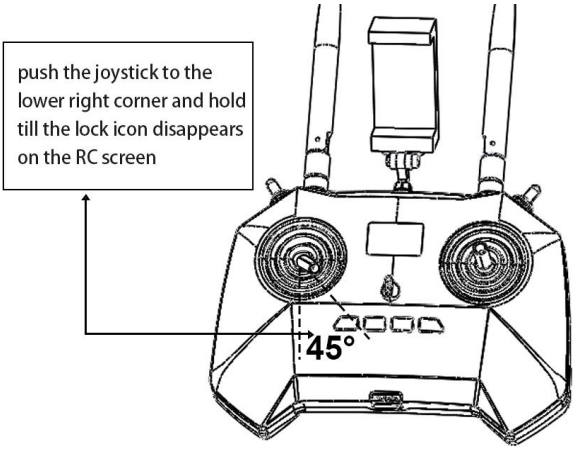

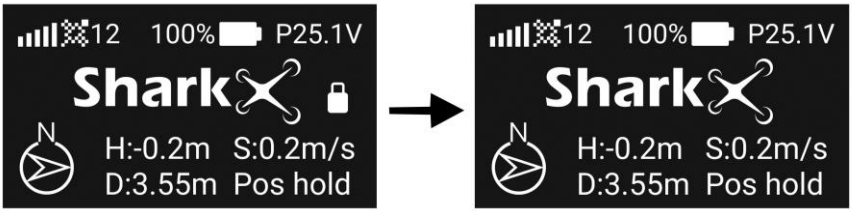

Notice the location where the SharkX gets unlocked will be the **HOME** point

4.8.3. Take off the SharkX

Push the **left joystick** up gently to take off the SharkX.

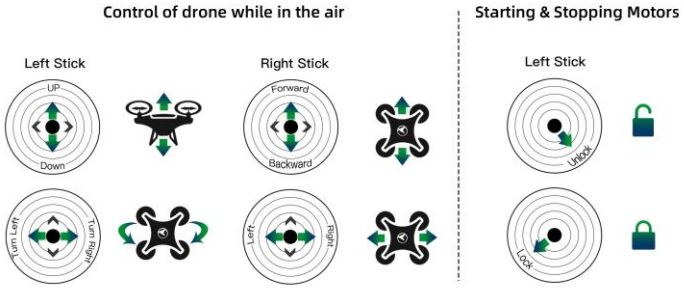

4.9. Control the SharkX

4.9.1. Vertical flight

- Push the left joystick up to ascend and down to descend. Always push the joystick gently to prevent sudden and unexpected elevation changes.
- Moving the left joystick left and right adjusts the direction of the drone nose. Push the left joystick left to rotate the SharkX counter-clockwise and right to rotate the SharkX clockwise.

4.9.2. Horizontal flight

- Push the right joystick up to fly forward and down to fly backward.
- Push the right joystick left to fly left and right to fly right.

Notice when both joysticks are centered, the SharkX will hover at the current position.

Notice do not pull the fishing line if it gets snagged with the drone in case it may break the drone's balance.

4.10. Return & Land the SharkX Manually via Controller

4.10.1. Use the **joysticks** to return the SharkX to the desired landing spot.

4.10.2. Push the left joystick down gently. The SharkX will descend to the height of 5 meters and hover a short while before landing safely on the ground. And then push the **left joystick** to the lower left corner and hold until the controller beeps, the lock icon shows on the controller screen and all **propellers** stop rotating, which means the SharkX has been locked.

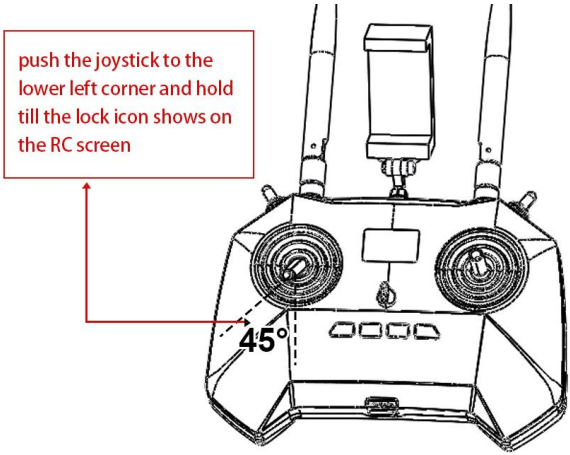

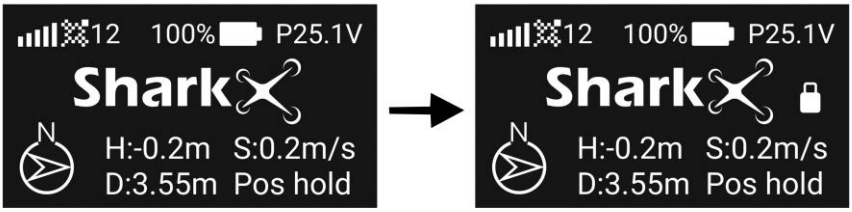

4.11. Return & Land the SharkX Automatically via Controller

4.11.1. Short press the '**RTL'** button on the controller until 'RTL' shows on the controller screen and the controller beeps.

4.11.2. The SharkX will start flying to the **HOME** point, descend to the height of 10 meters and hover a short while before landing safely on the ground. After landing, the SharkX will get locked automatically.



4.12. Cancel RTL

4.12.1. Toggle the lever to '**Alt Hold**' and then back to '**Pos Hold**' on the controller.

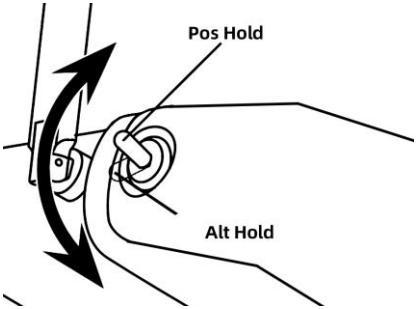

Notice always remember to unlock the SharkX before taking off again

4.13. Cast the Fishing Line via Controller

The **Hook Release Mechanism** is on the middle bottom of the drone.

4.13.1. Attach the fishing line

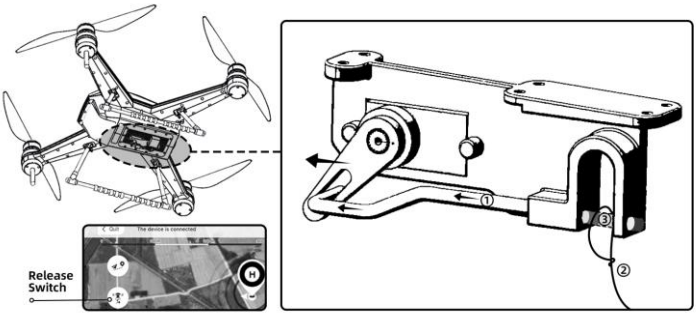

①. Press the 'Release Switch' button on the remote control to open the hook release mechanism.
②. Put the fishing line in the device.
③. Press the 'Release Switch' button on the remote control to close the hook release mechanism.

Notice recommended not to attach the fishing line when the SharkX is hanging in the air to avoid accidents

4.13.2. Fly the SharkX to the desired fishing spot and press the ‘Hook Release’ button on the controller to cast the fishing line.

5. Maintenance

5.1. Take Care of the SharkX

5.1.1. Cleaning, disinfecting and rinsing

- The controller cannot be washed with water, but it can be cleaned with a damp cloth.
- Clean the SharkX with a damp cloth after each use and use a dry cloth to wipe the SharkX. Do not rinse the controller with water, but wipe it with a soft, clean, damp cloth.
- Use commercial cleaning agents and disinfectants if necessary.
- Do not use alcohol (such as spirits), chemical cleaning agents or solvents as they can damage plastic parts.
- Do not apply cleaning agents directly onto the devices directly. Always apply them onto a soft cloth to clean the devices.
- Do not clean any electrical or mechanical parts.

5.1.2. Storing the SharkX during intervals of normal use

- Make sure that everything works properly before storing the product.
- Disassemble the propellers.
- Put the product in its original packaging.
- Store the product within a temperature range of 5°C to 40°C and with a relative humidity of max. 50% at +40°C.
- Take out the SharkX battery.
- Store the SharkX battery in cool and dry place
- Store the battery at temperatures between -20°C to 25°C
- Regularly charge the battery to avoid the over-discharge that may lead the loss of battery's function. Ensure to recharge the battery if it has been left non-charged for one month.

5.2. Charge the SharkX Battery

NOTICE

- Only charge the battery with the provided battery charger
- Connect all cables properly before charging

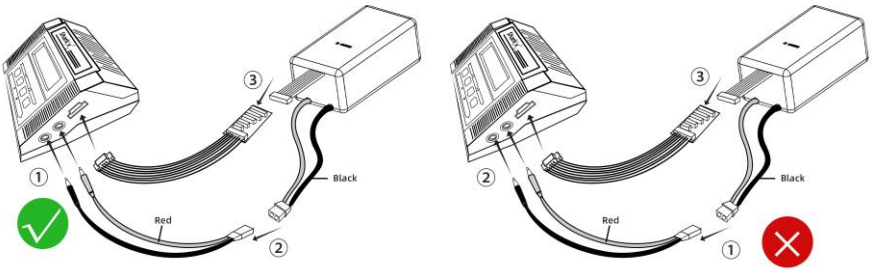

For safety concerns, please make sure the cables are connected with the adaptor first

Notice always charge the battery when the temperature is between 10°C and 45°C. The charger will stop charging if the temperature is not within the range.

The battery charging time is approx 2 hours. When the SharkX battery is fully charged:

- Unplug the power cord from the power supply
- Disconnect the charging cables with the SharkX battery and the charger
- Disconnect the power cord with the battery charger.

5.3. Charge the Controller

5.3.1. Connect the charger with the controller, and insert the plug into the power supply.

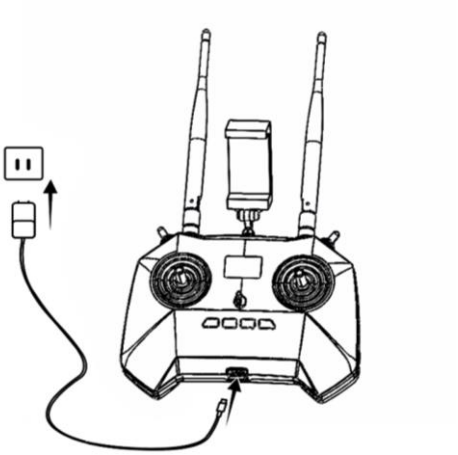

The charging time is approx. 3.5 hours.

Notice always charge the controller when the temperature is between 10°C and 45°C. The charger will stop charging if the temperature is not within this range.

The charger should be only used for charging the SharkX remote controller. Do not use it to charge other devices such as a laptop.

5.4. Battery Capacity Checker Instructions

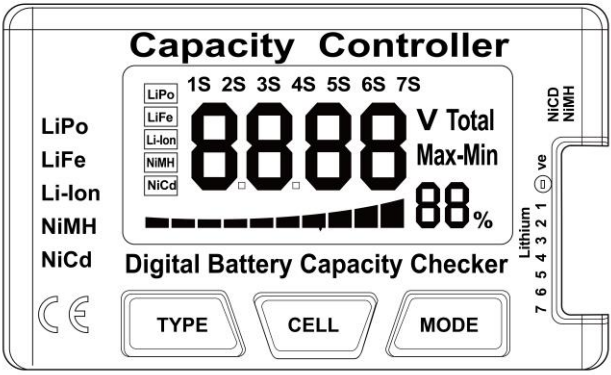

	LiPo	LiFe	Li-Ion	NiCd	NiMH
Input Cells	1~7 cells	1~7 cells	1~7 cells	4~7 cells	4~7 cells
Total Voltage	√	√	√	√	√
Total Cell Battery Capacity(0-99%)	√	√	√	×	×
Individual Battery Cell Voltage	√	√	√	×	×
Lowest Cell Voltage	√	√	√	×	×
Highest Cell Voltage	√	√	√	×	×
Voltage Difference between Highest and Lowest Cell Voltages	√	√	√	×	×

Notice Please read the instructions carefully

5.4.1. Balance function

Long press the first button, LIPO/LIIO will blink, says it is in balance, balance process according to the second button can view each battery voltage, balance is take the battery in the lowest section as the benchmark to discharge balance.

5.4.2. Battery checker layout

Buttons:

Battery Type: NiCd/NiMH, Li-Po, LiFe, Li-Ion

Cell Number: NiCd/NiMH(4~7 cells), Lithium type (1~7 cells)

Display Mode: battery cell voltages, total voltages, lowest cell voltage, highest cell voltage, voltage gap between highest cell voltage and lowest cell voltage, remaining battery capacity (%)

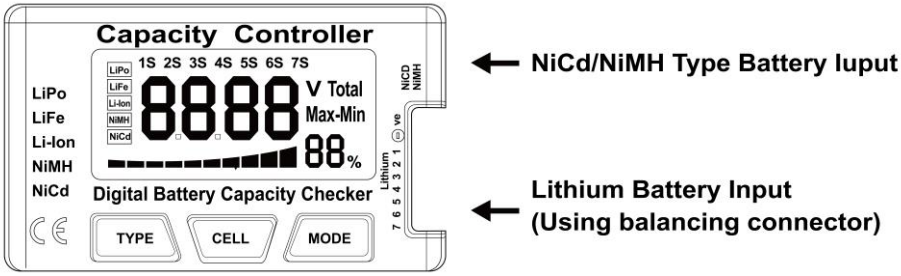

NiCd/NiMH TYPE BATTERY

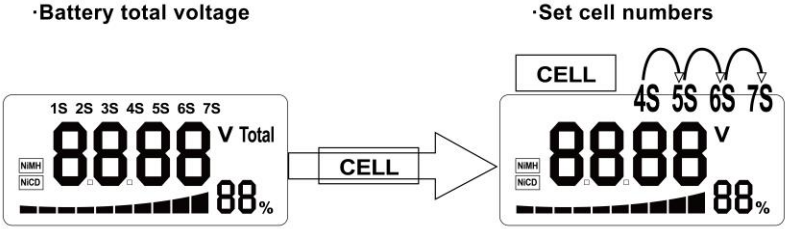

Total voltages，and remaining capacity（%）

n.b.The capacity shown for Nixx type cells is not accurate and should not be relied upon.

NiCd and NiMH batteries for the TX and RX (4~7 cells) can be connected to this capacity checker.

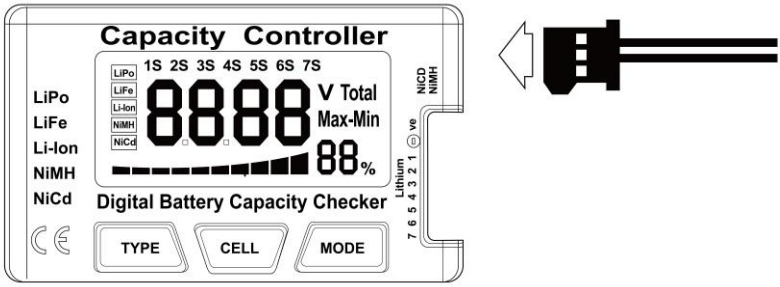

LITHIUM TYPE BATTERIES

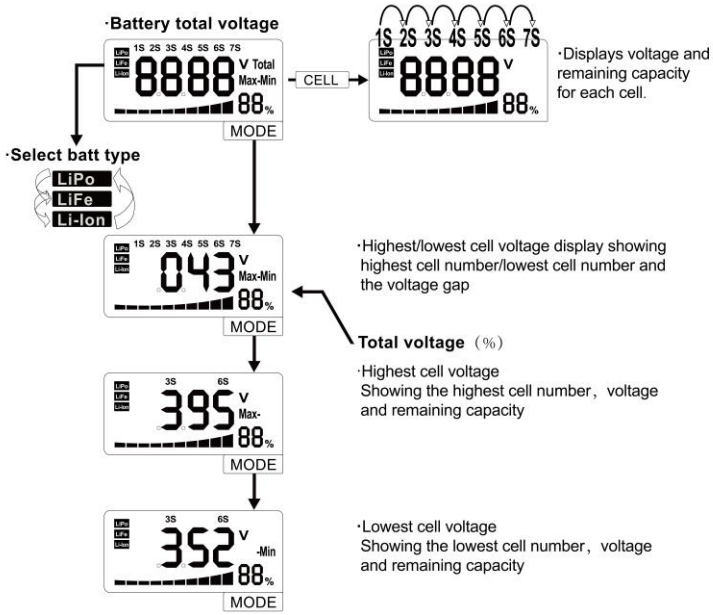

JST EH and JST XH type plugs on lithium battery packs can be directly connected to this battery checker.

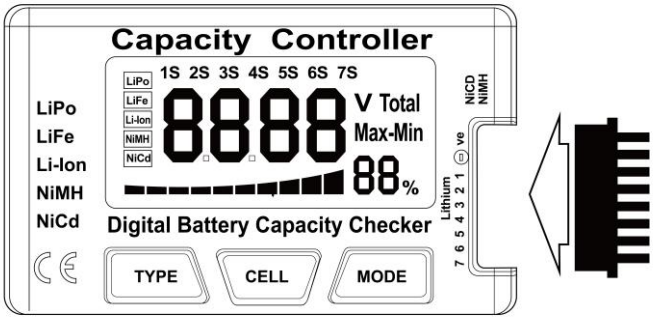

When using with Thunder Power/Flight Power and Poly quest type batteries, it is necessary to use an adaptor board with balance adaptor board lead.
FS-BLEAD Balance Adaptor Board Lead.
FS-BAPQ Balance Adaptor Board Poly Quest.
FS-BATP Balance Adaptor Board Flight Power/Thunder Power

5.5. Inspect the Product

5.5.1. Weekly inspection tasks

Task	Frequency
1. Check if the motors function properly	Before each use and weekly
2. Check if the propellers are firmly tightened	Before each use and weekly

5.6. After-sales Information

Visit the following pages to learn more about after-sales policy and warranty information.

https://www.rippton.com/support

6. Troubleshooting and Repair

6.1. Identify and Solve Problems

Error	Possible Cause	Solution
Product does not start	Empty battery	Charge the battery
Motors do not function	Empty battery	Charge the battery
Propeller(s) malfunction	Broken propeller(s)	Replace the propeller(s)

6.2. Replacing the Propellers

6.2.1. Disassemble the propellers

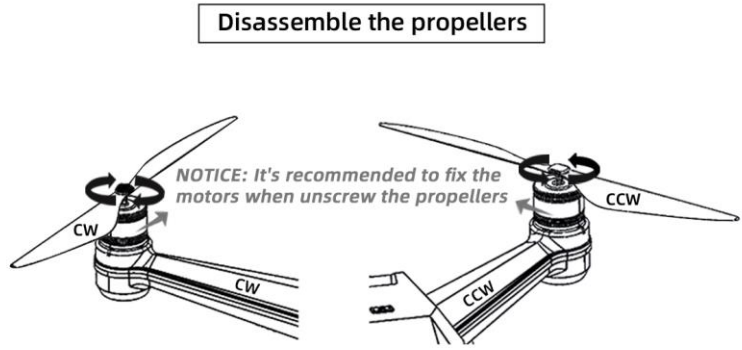

6.2.2. Please refer to ***step 3.3*** to install the propellers.

7. Disposal

7.1. Disposal of Electronic Components

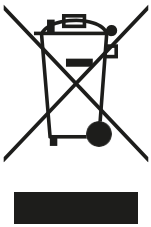

The symbol on the product, the accessories and packaging indicate that this device must not be treated as unsorted municipal waste but must be collected separately. Dispose of the device via a collection point for the recycling of waste electrical and electronic equipment if you live within the EU and in other European countries that operate separate collection systems for waste electrical and electronic equipment. By disposing of the device in the proper manner, you help to avoid possible hazards to the environment and public health that could otherwise be caused by improper treatment of waste equipment. The recycling of materials contributes to the conservation of natural resources. Therefore, do not dispose of your old electrical and electronic equipment together with the unsorted municipal waste.

7.2. Disposal of Packaging Waste

The packaging is made of environmentally friendly materials, which may be disposed of through your local recycling facilities. By disposing of the packaging and packaging waste in the proper manner, you help to avoid possible hazards that could harm the environment and public health. The symbol on the packaging indicates that the packaging is made of PAP.

7.3. Disposal of Batteries

The product contains a battery. Batteries must not be disposed of with the usual domestic waste. They may contain toxic heavy metals and are subject to hazardous waste regulations. For this reason, dispose of used rechargeable batteries at a local collection point.

8. FCC Compliance

8.1. FCC Compliance

This equipment has been tested and found to comply with the limits for a Class B digital device, pursuant to Part 15 of the FCC Rules. These limits are designed to provide reasonable protection against harmful interference in a residential installation. This equipment generates, uses and can radiate radio frequency energy and, if not installed and used in accordance with the instructions, may cause harmful interference to radio communications.

However, there is no guarantee that interference will not occur in a particular installation. If this equipment does cause harmful interference to radio or television reception, which can be determined by turning the equipment off and on, the user is encouraged to try to correct the interference by one or more of the

following measures:

- Reorient or relocate the receiving antenna.
- Increase the separation between the equipment and receiver.
- Connect the equipment into an outlet on a circuit different from that to which the receiver is connected.
- Consult the dealer or an experienced radio/TV technician for help.
- The device must not be co-located or operating in conjunction with any other antenna or transmitter.

8.2. FCC Warning Message

Any changes or modifications to this unit not expressly approved by the party responsible for compliance could void the user's authority to operate the equipment.

This device complies with Part 15 of the FCC Rules. Operation is subject to the following two conditions: (1) this device may not cause harmful interference, and (2) this device must accept any interference received, including interference that may cause undesired operation.

8.3. FCC RF Radiation Exposure Statement Caution

To maintain compliance with the FCC’s RF exposure guidelines, place the product at the least 20cm from nearby persons.

8.4. FCC RF Exposure Information (SAR)

This device meets the government's requirements for exposure to radio waves. This device is designed and manufactured not to exceed the emission limits for exposure to radio frequency (RF) energy set by the Federal Communications Commission of the U.S. Government.

The exposure standard for wireless devices employs a unit of measurement known as the Specific Absorption Rate, or SAR. The SAR limit set by the FCC is 1.6 W/kg. Tests for SAR are conducted using standard operating positions accepted by the FCC with the device transmitting at its highest certified power level in all tested frequency bands. Although the SAR is determined at the highest certified power level, the actual SAR level of the device while operating can be well below the maximum value. This is because the device is designed to operate at multiple power levels so as to use only the power required to reach the network.

In general, the closer you are to a wireless base station antenna, the lower the power output. While there may be differences between the SAR levels of various devices and at various positions, they all meet the government requirement.

Email: support@rippton.com